THE 6
GRAN TURISMO

THE NEW BMW 6 SERIES GRAN TURISMO.

18 Highlights

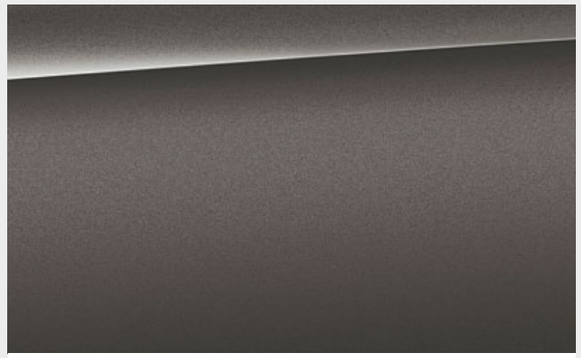

20 Worlds of colour

24 Wheels and tyres / Original BMW Accessories

YOUR BMW BROCHURES APP.

DOWNLOAD NOW THE BMW BROCHURES APP FROM YOUR APP STORE
AND DISCOVER DRIVING PLEASURE!

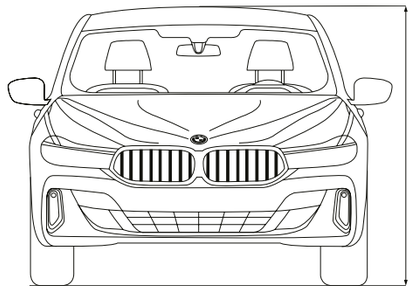

26 Technical data

STATEMENT
OF A NEW TIME.

EVERY GREAT TOUR BEGINS
WITH A GREAT PERFORMANCE.

THE BEST THING
ABOUT BEING
ON THE ROAD?
TO FEEL AT HOME.

TRAVEL COMPANION WITH OPTIMAL CONNECTIONS.

ACCELERATES YOU EFFORTLESSLY
INTO THE COMFORT ZONE.

YOUR OWN PATHS ARE
CREATED BY DRIVING THEM:
THE NEW BMW 6 SERIES GRAN TURISMO.

HIGHLIGHTS.

Discover even more with the new BMW Brochures app. Available now, for your smartphone and tablet.

■ Standard equipment □ Optional equipment

□ In laser high-beam mode, BMW Laserlight illuminates a range of up to 650 m, nearly twice as far as that of conventional headlights. Better visibility in the dark significantly increases safety. Blue accents and the lettering "BMW Laser" in the headlight also underline the technological standards and the sportiness of the vehicle.

□ Using the lever on the right or left seat in the rear, the angle of the respective backrest can each be adjusted up to 9 degrees forwards or backwards. So passengers in the rear can achieve their ideal seat position. These adjustment options also facilitate the transportation of bulky objects in the luggage compartment.

□ The Comfort Access* makes it possible to open all of the vehicle doors and the luggage compartment, without using the key. When approaching, the welcome greeting is activated even before the doors unlock automatically. You can additionally set up a BMW Digital Key on an iPhone – if compatible – or use the Key Card for accessing and starting the vehicle.

□ When open, the Panorama glass roof provides a great deal of fresh air. Closed, it creates a bright, light-flooded atmosphere in the interior. It opens and closes completely automatically at the push of a button or with the vehicle key, and is equipped with slide and lift functions, roller sunblind and wind deflector.

□ The Automatic air conditioning with 4-zone control allows individual climate comfort for you and your front passenger, as well as for the right and left rear passengers.

□ The high-performance M Sport brake is distinguished by exclusive red high-gloss* brake callipers with M designation and outstanding braking performance.

■ The BMW Live Cockpit Professional with navigation function includes two high-quality displays consisting of a high-resolution 12.3" Control Display that can be operated by touch and a fully digital 12.3" instrument display. The BMW Operating System 7 can also be operated via the iDrive Touch Controller.

□ Ambient light, including Ambient contour lighting in the front and rear doors, creates a relaxed, cosy lighting atmosphere in the interior. The six dimmable lighting designs also include a dynamic function in four applications. The Welcome Light Carpet illuminates the area in front of the vehicle doors when entering and exiting.

□ The Executive Drive* suspension control system ensures exceptional driving comfort and outstanding driving dynamics at the same time. The system is based on active stabilizers that electro-mechanically regulate suspension continually during the journey, thereby minimising the movement of the car body.

■ Arrive with fresh energy? Relax when stressed? No problem with Caring Car. When you say, 'Hey, BMW. I'm tired,' or 'Hey, BMW. I'm feeling stressed,' your BMW Intelligent Personal Assistant* will launch the Caring Car Vitalize or Caring Car Relax Program. Both stimulate your senses by coordinating the interplay of various interior functions.

□ Driving Assistant Professional[1], * offers optimum comfort and safety during critical or monotonous traffic situations. Apart from the contents of the Driving Assistant, it also includes Steering and Lane Control Assistant with extended functions, Lane Change and Emergency Stop Assistant and Lane Keeping Assistant with active side collision protection.

□ Rear-seat entertainment Professional* includes two separate 10.2" colour screens that can be tilted and a Blu-ray drive. This makes it possible to use the navigation system or access online features while on the road (with an existing mobile phone contract). Features operation via touch on the display, USB port and ports for MP3 players, games consoles and headphones (also wireless).

[1] Function may be limited in darkness, fog or bright glare.

*The availability of some equipment features and functions depends on engine variants or additional options. The market and production availability may vary. You can find detailed information about terms, standard and optional equipment at **www.bmw.com** or at your BMW Partner.

EXTERIOR COLOURS.

Discover even more with the new BMW Brochures app. Available now, for your smartphone and tablet.

■ Standard equipment □ Optional equipment

■ Non-metallic 300 Alpine White[1]

□ Metallic WA96 Mineral White[2]

□ Metallic C2Y Bluestone

□ Metallic C3E Bernina Grey Amber Effect[2]

□ Metallic WA90 Sophisto Grey brilliant effect[2]

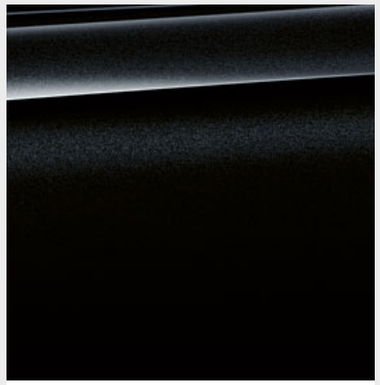

□ Metallic 475 Black Sapphire

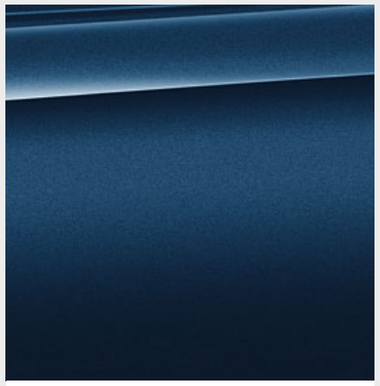

□ Metallic C1M Phytonic Blue

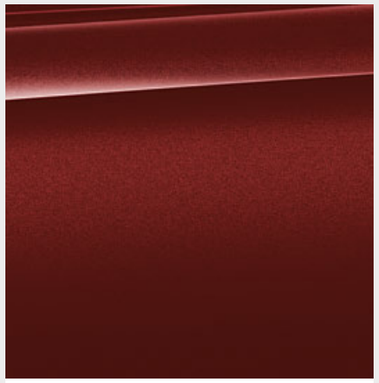

□ Metallic C3C Piemont Red[2]

BMW INDIVIDUAL

□ BMW Individual WC36 Dravite Grey metallic[2]

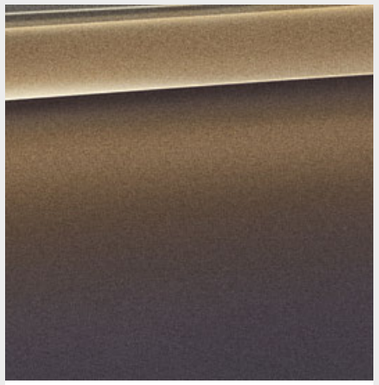

□ BMW Individual C5E Alvite Grey metallic[2]

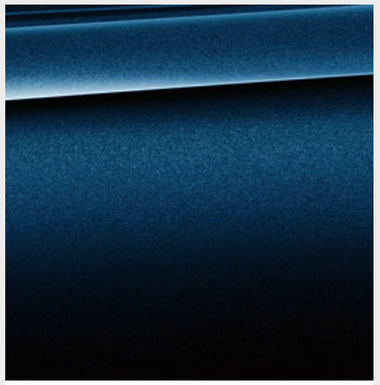

□ BMW Individual C3Z
Tanzanite Blue metallic[2]

M SPORT PACKAGE

□ Metallic C31 Portimao Blue[3]

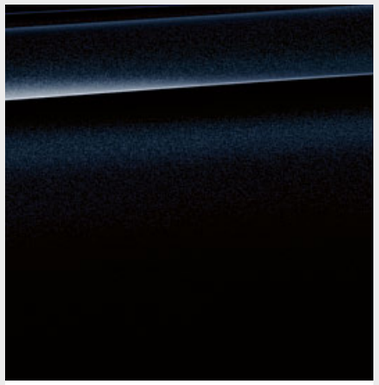

□ Metallic 416 Carbon Black[3]

[Colour samples] These colour samples are intended as an initial guide to the colours and materials available for your BMW. However, experience has shown that printed versions of paint, upholstery and interior trim colours cannot in all cases faithfully reproduce the appearance of the original colour. Please discuss your preferred colour choices with your BMW partner or in your dealership. There you can also see original samples and be assisted with special requests.

[1] Also available as standard for the M Sport package.
[2] Optionally available for the M Sport package.
[3] Exclusively available in conjunction with M Sport package.

The availability of some equipment features and functions depends on engine variants or additional options. The market and production availability may vary. You can find detailed information about terms, standard and optional equipment at **www.bmw.com** or at your BMW Partner.

INTERIOR COLOURS.

Discover even more with the new BMW Brochures app. Available now, for your smartphone and tablet.

■ Standard equipment □ Optional equipment

LEATHER

	Available with	
	□ **Base model** □ **Luxury Line** □ **M Sport package**	Leather 'Dakota' LCSW Black*
	□ **Base model** □ **Luxury Line** □ **M Sport package**	Leather 'Dakota' LCFI Ivory White exclusive stitching/ leather piping in contrast
	□ **Base model** □ **Luxury Line** □ **M Sport package**	Leather 'Dakota' LCRO Cognac exclusive stitching/ leather piping in contrast*
	■ **Base model** ■ **Luxury Line** □ **M Sport package**	Leather 'Dakota' LCFK Black exclusive stitching/ leather piping in contrast Black
	□ **Base model** □ **Luxury Line** □ **M Sport package**	Exclusive leather 'Nappa' LZFI Ivory White exclusive stitching/leather piping in contrast*
	□ **Base model** □ **Luxury Line** □ **M Sport package**	Exclusive leather 'Nappa' LZNI Mocha exclusive stitching/ leather piping in contrast*
	□ **Base model** □ **Luxury Line** □ **M Sport package**	Exclusive leather 'Nappa' LZFK Black exclusive stitching/ leather piping in contrast*
	■ **M Sport package**	Leather 'Dakota' LCNL Black, contrast stitching blue

INTERIOR TRIM FINISHERS

	Available with	
	■ **Base model**	Interior trim finishers Oxide Silver dark matt with highlight trim finisher Pearl Chrome
	■ **M Sport package**	Interior trim finishers Aluminium Rhombicle Smoke Grey with highlight trim finisher Pearl Chrome
	□ **Base model** □ **Luxury Line** □ **M Sport package**	Fine-wood trim Ash Trunk open-pored with highlight trim finisher Pearl Chrome
	□ **Base model** ■ **Luxury Line** □ **M Sport package**	Fine-wood trim ‚Fineline' Ridge with highlight trim finisher Pearl Chrome
	□ **Base model** □ **Luxury Line** □ **M Sport package**	Fine-wood trim 'Fineline' Cove with highlight trim finisher Pearl Chrome
	□ **Base model** □ **Luxury Line** □ **M Sport package**	Fine-wood trim poplar grain grey with highlight trim finisher Pearl Chrome

BMW INDIVIDUAL INTERIOR TRIM FINISHERS

	Available with	
	□ **Base model** □ **Luxury Line** □ **M Sport package**	BMW Individual fine-wood trim Sen light brown with highlight trim finisher Pearl Chrome*
	□ **Base model** □ **Luxury Line** □ **M Sport package**	BMW Individual fine-wood trim plum brown high-gloss with highlight trim finisher Pearl Chrome*
	□ **Base model** □ **Luxury Line** □ **M Sport package**	BMW Individual interior trim finishers piano finish Black with highlight trim finisher Pearl Chrome

Please note that even normal long- or short-term use can lead to unrecoverable upholstery damage. This can be caused in particular by non-colourfast clothing.

Please note that the interior colour depends on the selected upholstery colour.

*The availability of some equipment features and functions depends on engine variants or additional options. The market and production availability may vary.

You can find detailed information about terms, standard and optional equipment at **www.bmw.com** or at your BMW Partner.

WHEELS AND TYRES.

Discover even more with the new BMW Brochures app. Available now, for your smartphone and tablet.

■ 17" light alloy wheels V-spoke style 618 Reflex Silver, wheel size 7.5J x 17 with 225/55 R17 tyres.*

□ 18" light alloy wheels V-spoke style 684 Ferric Grey, gloss-lathed, wheel size 8J x 18 with 245/45 R18 tyres.

□ 19" light alloy wheels V-spoke style 620 in Reflex Silver, wheel size 8.5J x 19 with 245/45 R19 tyres.

□ 19" light alloy wheels Double-spoke style 630 Bicolour Orbit Grey, gloss-lathed, wheel size 8.5J x 19 with 245/45 R19 tyres.

■ 19" light alloy wheels Multi-spoke style 644 Ferric Grey, gloss-lathed, wheel size 8.5J x 19 with 245/45 R19 tyres.[2]

■ 19" M light alloy wheels Double-spoke style 647 M Bicolour Orbit Grey with mixed tyres and run-flat tyres, gloss-lathed, wheel size front 8.5J x 19 with 245/45 R19 tyres, wheel size rear 9.5J x 19 with 275/40 R19 tyres.[1]

□ 19" light alloy wheels V-spoke style 685 Orbit Grey, gloss-lathed, wheel size 8.5J x 19 with 245/45 R19 tyres.

□ 20" M light alloy wheels Double-spoke style 648 M in Bicolour Orbit Grey with mixed tyres and run-flat tyres, gloss-lathed, wheel size front 8.5J x 20 with 245/40 R20 tyres, wheel size rear 10J x 20 with 275/35 R20 tyres.[1]

□ 20" BMW Individual light alloy wheels V-spoke style 649 I Bicolour, Ferric Grey with mixed tyres and run-flat tyres, gloss-lathed, wheel size front 8.5J x 20 with 245/40 R20 tyres, wheel size rear 10J x 20 with 275/35 R20 tyres.

□ 20" light alloy wheels V-spoke style 686 Jet Black with mixed tyres and run-flat tyres, gloss-lathed, wheel size front 8.5J x 20 with 245/40 R20 tyres, wheel size rear 10J x 20 with 275/35 R20 tyres.

□ 20" light alloy wheels Multi-spoke style 777 Bicolour Ferric Grey with mixed tyres and run-flat tyres, gloss-lathed, wheel size front 8.5J x 20 with 245/40 R20 tyres, wheel size rear 10J x 20 with 275/35 R20 tyres.[2]

□ 20" M light alloy wheels Star-spoke style 817 M in Bicolour Orbit Grey with mixed tyres and runflat tyres, gloss-lathed, wheel size front 8.5J x 20 with 245/40 R20 tyres, wheel size rear 10J x 20 with 275/35 R20 tyres.[1]

[1] Only available in conjunction with M Sport package.
[2] Only available in conjunction with Luxury Line.

*The availability of some equipment features and functions depends on engine variants or additional options. The market and production availability may vary. You can find detailed information about terms, standard and optional equipment at **www.bmw.com** or at your BMW Partner.

ORIGINAL BMW ACCESSORIES.

■ Standard equipment □ Optional equipment ○ Accessories

○ The modern BMW roof box in black with titanium silver side panels has a storage capacity of 420 litres and is compatible with all BMW roof rack systems. Due to the fact that it can be opened from both sides and has triple central locking on each side it is convenient to load and lock for theft protection.

○ The high-quality 21" M Performance forged wheels Double-spoke style 650 M are designed in Bicolor Jet Black, gloss-lathed and feature the M Logo. TPMS summer complete wheel set with run-flat mixed tyres, wheel size 8.5J x 21 with tyre size 245/35 R21 96Y RSC at the front and 10J x 21 with tyre size 275/30 R21 98Y RSC at the rear.

○ The premium-quality 21" BMW light alloy wheels V-spoke style 687 are designed in Bicolor Jet Black, gloss-lathed, and feature rolled rims. TPMS summer complete wheel set with run-flat mixed tyres, wheel size 8.5J x 21 with tyre size 245/35 R21 96Y XL RSC at the front and 10J x 21 with tyre size 275/30 R21 98Y XL RSC at the rear.

○ The BMW clothes hanger makes it possible to hang clothing on the rear side of the backrest. Thanks to the plug-in coupling, it can be easily attached crash-proof to the separately available basic carrier or to the optional equipment "Travel & Comfort". Thanks to the hotel function (standard clothes hanger), it can also be used outside the car.

○ In the event of disturbances, the highly sensitive full-HD camera automatically records the situation in front of and behind the car.

○ Thanks to the BMW wireless charging station universal, the smartphone can be charged comfortably without a cable – even outside the vehicle.

○ Fitted, anti-slip, waterproof and durable BMW mat for the luggage compartment. In black with the BMW 6 Series emblem stainless steel inlay.

Discover the wide range of innovative solutions available for the exterior and interior, communication and information, and for transportation and the luggage compartment. Your BMW Partner is on hand to advise you on the whole range of Original BMW Accessories and the BMW M Performance Parts product portfolio. For further information, please visit **www.bmw.com**

TECHNICAL DATA.

BMW 6 SERIES GRAN TURISMO		630i[6] with mild hybrid technology	640i[6] 640i xDrive[6] with mild hybrid technology	620d[6] 620d xDrive[6] with mild hybrid technology	630d[6] 630d xDrive[6] with mild hybrid technology	640d xDrive[6] with mild hybrid technology
Weight						
Unladen weight EU (xDrive)[1]	kg	1860	1930 (1985)	1910 (1965)	2005 (2065)	(2085)
Max. permissible weight (xDrive)	kg	2450	2510 (2575)	2490 (2550)	2575 (2640)	(2685)
Permitted load (xDrive)	kg	665	655 (665)	655 (680)	645 (650)	(675)
Permitted trailer load, unbraked (xDrive)[2]	kg	750	750 (750)	750 (750)	750 (750)	(750)
Permitted trailer load, braked, max. 12 % gradient/max. 8 % gradient (xDrive)[2]	kg	2100/2100	2100/2100 (2100/2100)	2100/2100 (2100/2100)	2100/2100 (2100/2100)	(2100/2100)
Luggage capacity	l	600 – 1800	600 – 1800	600 – 1800	600 – 1800	600 – 1800
BMW TwinPower Turbo engine[3]						
Cylinders/valves	–	4/4	6/4	4/4	6/4	6/4
Capacity	cm^3	1998	2998	1995	2993	2993
Max. output/engine speed	kW (hp)/ 1/min	190 (258)	245 (333)	140 (190)	210 (286)	250 (340)
With mild hybrid technology	kW (hp)	+8 (11)	+8 (11)	+8 (11)	+8 (11)	+8 (11)
Max. torque/engine speed	Nm/ 1/min	400/ 1550 – 4400	450/ 1600 – 4800	400/ 1750 – 2500	650/ 1500 – 2500	700/ 1750 – 2250
Power transmission						
Type of drive	–	Rear-wheel	Rear-wheel (all-wheel)	Rear-wheel (all-wheel)	Rear-wheel (all-wheel)	(all-wheel)
Standard transmission (xDrive)	–	8-speed Steptronic	8-speed Steptronic (8-speed Steptronic)	8-speed Steptronic (8-speed Steptronic)	8-speed Steptronic (8-speed Steptronic)	(8-speed Steptronic)
Performance						
Top speed (xDrive)	km/h	250[5]	250[5]	220 (218)	250[5] (250[5])	250[5]
Acceleration 0 – 100 km/h (xDrive)	s	6.5	5.5 (5.4)	7.9 (8.0)	6.1 (5.9)	(5.3)
Consumption[3, 4] – All engines conform to the EU6 standard						
Urban (xDrive)	l/100 km	7.2 – 7.4	8.7 – 8.9 (9.4 – 9.5)	5.0 – 5.1 (5.4 – 5.6)	6.1 – 6.2 (6.4 – 6.7)	(6.7 – 6.9)
Extra-urban (xDrive)	l/100 km	5.2 – 5.4	5.7 – 5.9 (6.0 – 6.2)	4.1 – 4.2 (4.3 – 4.5)	4.2 – 4.4 (4.4 – 4.6)	(4.6 – 4.8)
Combined (xDrive)	l/100 km	5.9 – 6.1	6.8 – 7.0 (7.2 – 7.4)	4.4 – 4.6 (4.7 – 4.9)	4.9 – 5.0 (5.1 – 5.3)	(5.4 – 5.6)
Exhaust emissions standard (type-certified)	–	EU 6d	EU 6d	EU 6d	EU 6d	EU 6d
Combined CO_2 emissions (xDrive)	g/km	135 – 139	155 – 160 (166 – 170)	116 – 120 (124 – 129)	128 – 133 (135 – 140)	(141 – 147)
Tank capacity, approx.	l	68	68	66	66	66
Wheels/tyres						
Tyre dimensions		225/60 R 17	245/50 R 18	225/60 R 17	225/60 R 17	245/50 R 18
Wheel size		7.5 J x 17	8 J x 18	7.5 J x 17	7.5 J x 17	8 J x 18
Material		Light alloy	Light alloy	Light alloy	Light alloy	Light alloy

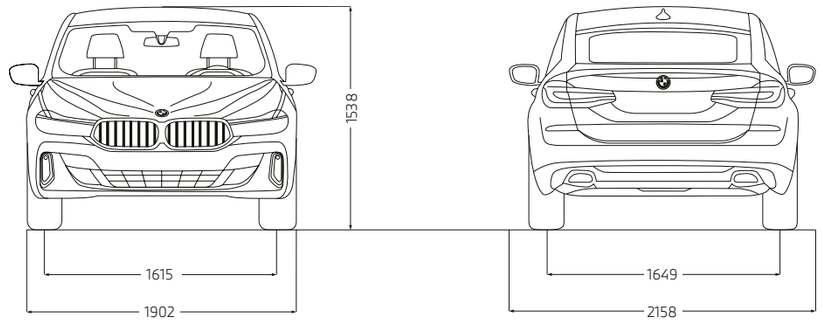

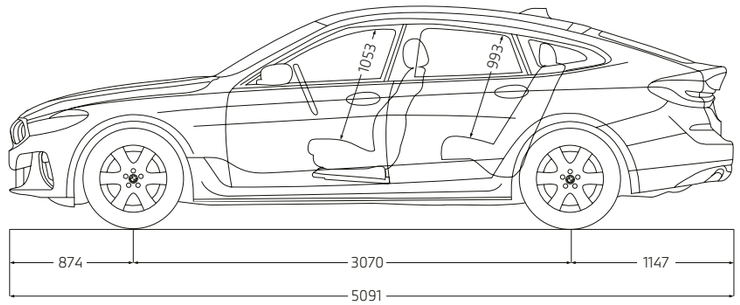

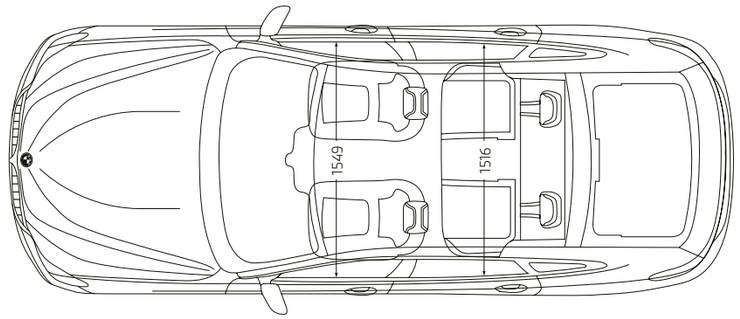

All dimensions in the technical drawing are given in millimetres.
The dimensions for xDrive vehicles may vary slightly.

The figures for performance, fuel consumption and CO_2 emissions refer to vehicles with standard transmission.

1 The EC unladen weight refers to a vehicle with standard equipment and does not include any optional extras. The unladen weight includes a 90 % full tank and a driver weight of 75 kg. Optional equipment may affect the weight of the vehicle, the payload and the top speed if the selected equipment has an impact on the vehicle's aerodynamics.
2 The actual total weight of the trailer must not exceed the maximum trailer load, taking into account the maximum tow bar download.
3 Performance data of petrol engines apply to vehicles using RON 98 fuel. Fuel consumption data apply to vehicles using reference fuels in accordance with EU Regulation 2007/715. Unleaded RON 91 and higher with a maximum ethanol content of 10 % (E10) may also be used. BMW recommends RON 95 super unleaded petrol.
4 The data for fuel consumption, CO_2 emissions and energy consumption are determined in accordance with the measurements processes as defined by European Regulation (EU) 2007/715 in the applicable version. Data refer to a vehicle with base-level equipment in Germany, and the ranges account for differences according to the selected wheel and tyre size and the optional equipment and may change during the configuration process. Figures have been determined on the basis of the new WLTP test cycle and have been converted back into NEDC figures for comparability. [For these vehicles, values other than those specified here may apply for the assessment of taxes and other vehicle-related charges that are (also) based on CO_2 emissions.]
5 Electronically limited.
6 This engine version is not available in all countries. For further information, please contact your local BMW Partner.

YOUR BMW BROCHURES APP.

DOWNLOAD NOW THE BMW BROCHURES APP FROM YOUR
APP STORE AND DISCOVER DRIVING PLEASURE!

BMW 640i xDRIVE GRAN TURISMO WITH M SPORT PACKAGE:
BMW TwinPower Turbo inline 6-cylinder petrol engine, 245 kW (333 hp), 20" M light alloy wheels Star-spoke style 817 M Bicolour with mixed and run-flat tyres, exterior colour in Bernina Grey Amber Effect, comfort seats in exclusive leather 'Nappa' Ivory White exclusive stitching/leather piping in contrast, interior trim finishers in fine-wood trim Ash Trunk open-pored with highlight trim finisher Pearl Chrome.

The models illustrated in this medium show the equipment and configuration options (standard and optional) for vehicles produced by BMW AG for the German market. Alterations in standard and optional equipment and the configurations available for the different models, as described in this medium, may occur after 05/04/2020, the editorial deadline for this medium, or according to the specific requirements of other markets. Your local BMW Partner is available to provide further details. Subject to change in design and equipment.
Of course, each vehicle is designed for economical recycling after its long-running life. You can find more information regarding your end-of-life vehicle on our website **www.bmw.de/recycling**.
© BMW AG, Munich, Germany. Not to be reproduced wholly or in part without prior written permission of BMW AG, Munich.

411 006 250 20 2 2020 CB. Printed in Germany 2020.